Sky Elevator
www.sky-elevator.com

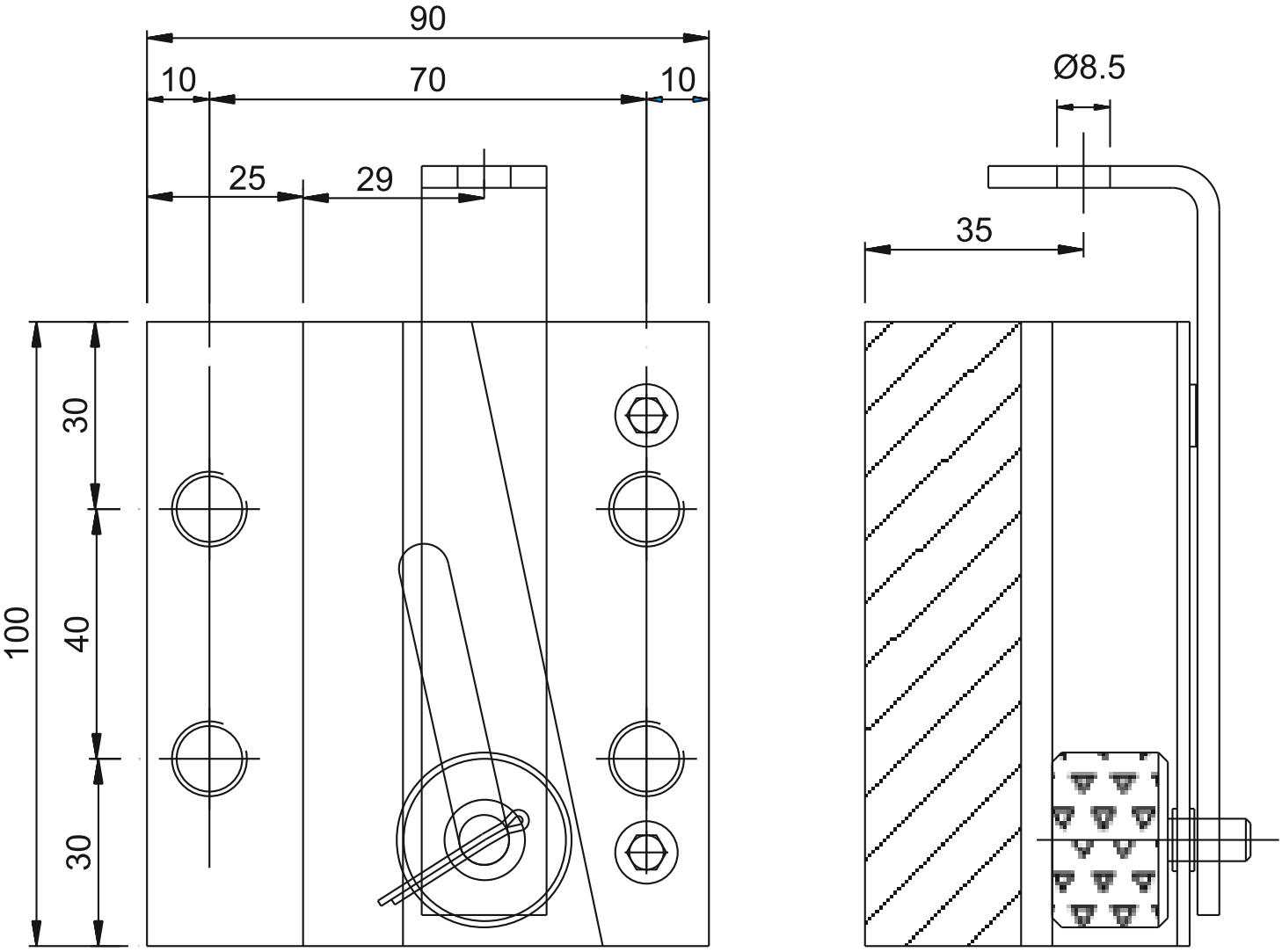

CODE	RAILS	MAX NORMAL SPEED	TRIPPING SPEED	HOLES	MATERIAL	GUIDE RAIL PROCESSING
Sky-553	8 to 10 mm	0.63m/s -1.10m/s	1 m/s	Rear M10	C 5	OILED / DRY